Adriana recess-fit deck shower

Deck shower for deluxe boats. Fitted with a large Bossini adjustable jet shower head with cold/hot water mixer. UV-resistant ASA housing. The shower head is easy to pull out and also works as cover. No lid for easier use and to prevent the tube to get stuck and damaged.

Code	Finish		⟷ mm		Pipe in	Hose m
	Compart-ment	shower head	recess	outer dimensions		
15.480.00	White ASA	Chromed	132x271	162x303	SS	4

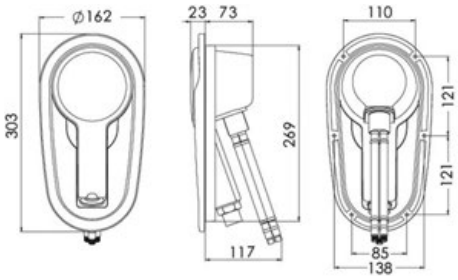

Rocky shower telescopic rod for outdoor purposes

This rod makes it possible to have a shower head on the stern gangplank.
Made of black anodized aluminum + stainless steel accessories.
Allows the shower to be oriented in all directions and heights.
Lightweight and telescopic for easy storage, rod outer diameter 35 mm (order 34.355.00 for bulkhead stowage).
Ideal to match Adriana deck shower 15.480.00 or Keji II Continuum Flow 15.237.06.

Code	Version	For showers	Type	Description
15.480.21	Without lid	-	Standard Base	Recessed stainless steel + POM bushing
15.480.26	With lid	-	Delux Base	Flush with sliding cover, POM bushing and countersunk screws
15.480.20	Aluminium	Generic	Rod	Universal shower rod in black anodized aluminium
15.480.28	Carbon	Generic	Rod	Universal carbon shower rod
15.480.29	Carbon	Saturn type 15.470. xx	Rod	Carbon shower rod only for Saturn shower 15.470.xx

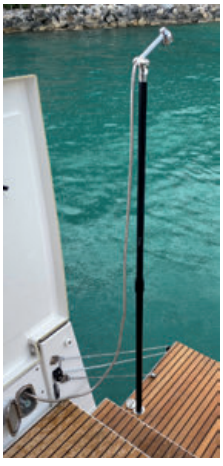

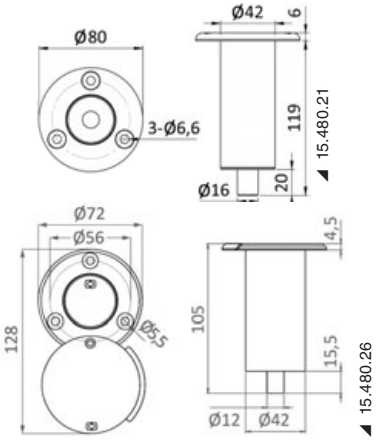

Utility handheld shower head

Plastic and chromed brass lever-operated shower head. The water system opens and activates the fresh water pump by pushing the button. It prevents using an intermediate locking faucet. Designed for deck mounting.

Code	Pipe in	Hose m	Chrome-plated brass deck support	Spare shower head
15.256.00	Net PVC	2.5	Yes	**15.256.02**
15.256.01	Net PVC	4	Yes	**15.256.02**
15.251.00	Net PVC	4	no	**15.256.02**

Plastic push-button shower head

Fitted with snap-on support for deck use.

Code	Pipe in	Hose m	Spare shower head
15.254.00	Net PVC	2.5	**15.242.02**
15.254.01	Net PVC	4	**15.242.02**